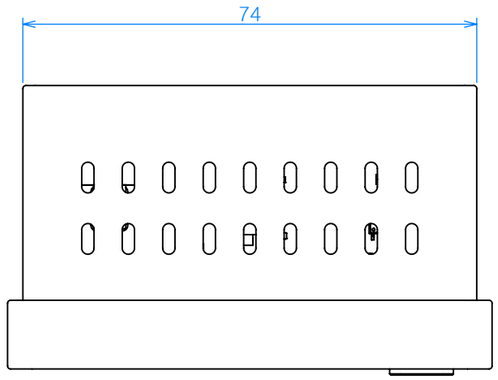
74

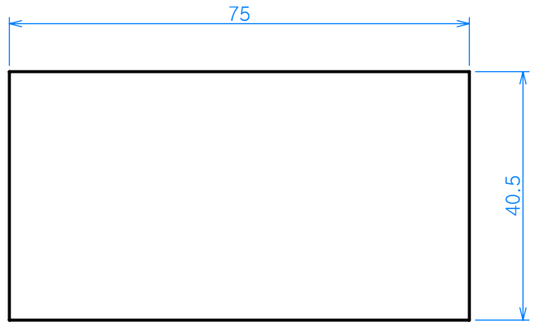
75
40.5

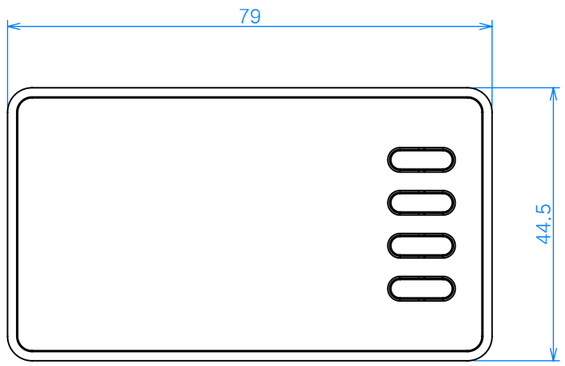
79
44.5

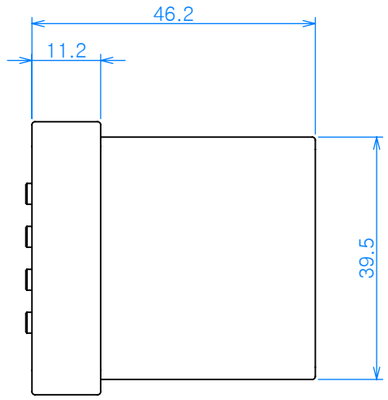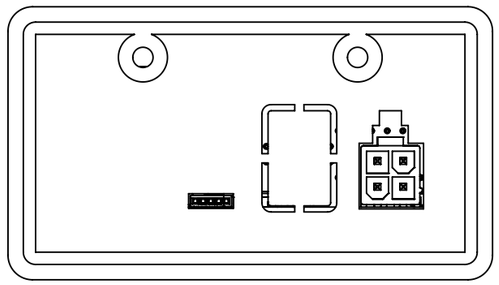
46.2
11.2
39.5